19-1725; Rev 1a; 3/01

MAXIM

460kbps, 1µA, RS-232-Compatible Transceiver

General Description

The MAX3314 is a ±5V powered EIA/TIA-232-compatible interface. It has one transmitter and one receiver in a flow-through architecture. The transmitter has a low-dropout output stage providing minimum RS-232-compatible ±3.7V output levels while driving 3kΩ and 1000pf at 460kbps. Both +5V and -5V are supplied externally.

The MAX3314 has a $\overline{SHDN}$ function that reduces supply current to 1µA. The transmitter is disabled and put into 3-state mode while the receiver remains active.

The MAX3314 is available in 8-pin SOT23, µMAX and SO packages.

Applications

Digital Cameras

PDA

GPS

POS

Telecommunications

Handy Terminals

Set-Top Boxes

Pin Configuration

TOP VIEW

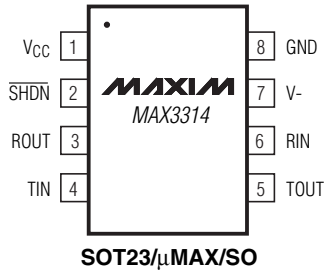

SOT23/µMAX/SO

Features

- ♦ **1µA Low-Power Shutdown with Receiver Active**
- ♦ **30µA Operating Supply Current**
- ♦ **460kbps (min) Data Rate**
- ♦ **8-Pin SOT23 Package**
- ♦ **RS-232-Compatible Levels**

Ordering Information

PART	TEMP. RANGE	PIN-PACKAGE
MAX3314CKA	0°C to +70°C	8 SOT23
MAX3314CUA	0°C to +70°C	8 µMAX
MAX3314CSA	0°C to +70°C	8 SO
MAX3314EKA	-40°C to +85°C	8 SOT23
MAX3314EUA	-40°C to +85°C	8 µMAX
MAX3314ESA	-40°C to +85°C	8 SO

Typical Operating Circuit

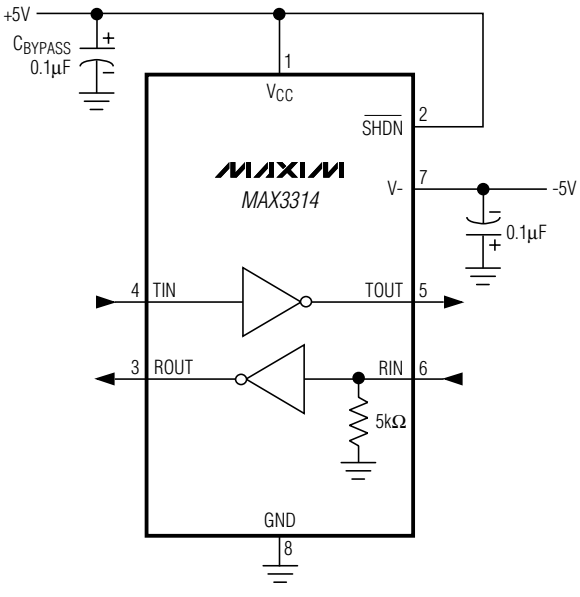

CAPACITORS MAY BE POLARIZED OR UNPOLARIZED.

For pricing, delivery, and ordering information, please contact Maxim/Dallas Direct! at 1-888-629-4642, or visit Maxim's website at www.maxim-ic.com.

460kbps, 1µA, RS-232-Compatible Transceiver

ABSOLUTE MAXIMUM RATINGS

V_{CC} to GND .....-0.3V to +6V
V- to GND .....+0.3V to -6V
Input Voltages
TIN, $\overline{SHDN}$ to GND .....-0.3V to +6V
RIN to GND .....±25V
Output Voltages
TOUT to GND.....±13.2V
ROUT .....-0.3V to (V_{CC} + 0.3V)
Short-Circuit Duration
TOUT to GND .....Continuous

Continuous Power Dissipation
8-Pin SOT23 (derate 9.7mW/°C above +70°C).....777mW
8-Pin µMAX (derate 4.1mW/°C above +70°C) 300mW
8-Pin SO (derate 5.88mW/°C above +70°C).....471mW
Operating Temperature Ranges
MAX3314C_A.....0°C to +70°C
MAX3314E_A.....-40°C to +85°C
Junction Temperature .....+150°C
Storage Temperature Range .....-65°C to +150°C
Lead Temperature (soldering, 10s) .....+300°C

Stresses beyond those listed under "Absolute Maximum Ratings" may cause permanent damage to the device. These are stress ratings only, and functional operation of the device at these or any other conditions beyond those indicated in the operational sections of the specifications is not implied. Exposure to absolute maximum rating conditions for extended periods may affect device reliability.

ELECTRICAL CHARACTERISTICS

(V_{CC} = +5V, V- = -5V, T_A = T_{MIN} to T_{MAX}, unless otherwise noted. Typical values are at T_A = +25°C.)

PARAMETER	SYMBOL	CONDITIONS	MIN	TYP	MAX	UNITS
DC CHARACTERISTICS						
Positive Supply Operating Range	V_{CC}		4.75	5	5.25	V
Negative Supply Operating Range	V-		-4.75	-5	-5.25	V
Positive Supply Current		$\overline{SHDN}$ = V_{CC}, no load		30	100	µA
Negative Supply Current		$\overline{SHDN}$ = V_{CC}, no load		15	30	µA
Shutdown Supply Current		$\overline{SHDN}$ = GND		1	10	µA
LOGIC INPUTS (TIN, $\overline{SHDN}$)						
Input Logic Threshold Low	V_{IL}		0.8			V
Input Logic Threshold High	V_{IH}				2.4	V
Transmitter Input Hysteresis				0.5		V
Input Leakage Current				±0.01		µA
RECEIVER OUTPUT						
Output Voltage Low	V_{OL}	I_{OUT} = 1.6mA			0.4	V
Output Voltage High	V_{OH}	I_{OUT} = -1.0mA	V_{CC} - 0.3	V_{CC} - 0.1		V
RECEIVER INPUT						
Input Threshold Low	V_{IL}		0.8			V
Input Threshold High	V_{IH}				2.4	V
Input Hysteresis				0.5		V
Input Resistance				5		kΩ
TRANSMITTER OUTPUT						
Output Voltage Swing		Transmitter output loaded with 3kΩ to ground	±3.7			V
Output Resistance (Note 1)		V_{CC} = V- = 0, transmitter output = ±2V	300			Ω
Output Short-Circuit Current					±60	mA
Output Leakage Current		V_{OUT} = ±12V, transmitter disabled			25	µA

Note 1: Not tested—guaranteed by design.

TIMING CHARACTERISTICS

(V_{CC} = +5V, V- = -5V, T_A = T_{MIN} to T_{MAX}, unless otherwise noted. Typical values are at T_A = +25°C.)

PARAMETER	SYMBOL	CONDITIONS	MIN	TYP	MAX	UNITS
Maximum Data Rate		R_L = 3kΩ, C_L =1000pf, transmitter switching	460			kbps
Receiver Propagation Delay	t_{PLH}	Receiver input to receiver output, C_L = 150pF		0.15		µs
	t_{PHL}	Receiver input to receiver output, C_L = 150pF		0.15		
Transmitter Skew				100		ns
Receiver Skew				50		ns
Transition Region Slew Rate		R_L = 3kΩ to 7kΩ, C_L = 150pF to 1000pF, measured from +3V to -3V or from -3V to +3V		8		V/µs

Typical Operating Characteristics

(V_{CC} = +5V, V- = -5V, 250kbps data rate, transmitter loaded with 3kΩ and C_L, T_A = +25°C, unless otherwise noted.)

SLEW RATE vs. LOAD CAPACITANCE

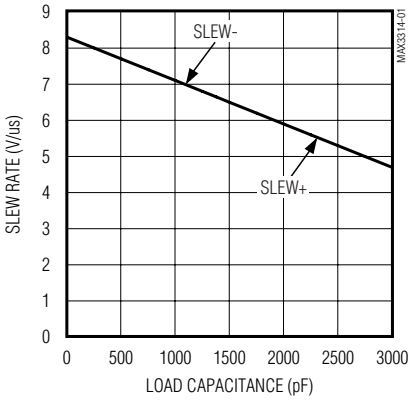

TRANSMITTER OUTPUT VOLTAGE vs. LOAD CAPACITANCE

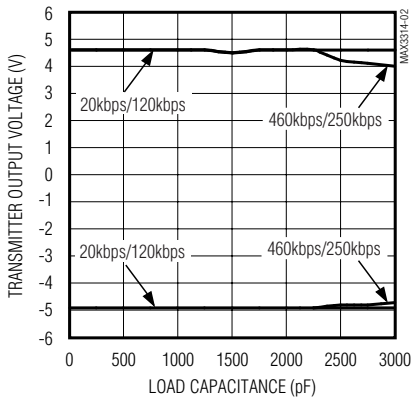

SUPPLY CURRENT vs. LOAD CAPACITANCE

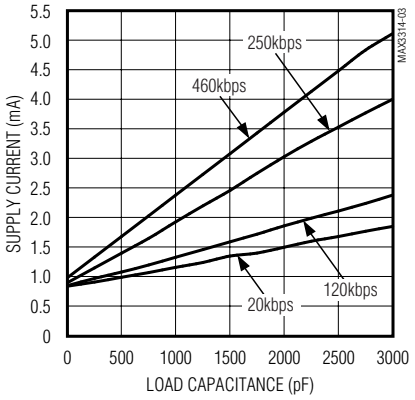

Pin Description

PIN	NAME	FUNCTION
1	V_{CC}	±5% External Power Supply. Decouple with a 0.1µF capacitor to ground.
2	$\overline{SHDN}$	Shutdown Active Low. 0 = OFF, 1 = ON.
3	ROUT	TTL/CMOS Receiver Output
4	TIN	TTL/CMOS Transmitter Input
5	TOUT	RS-232-Compatible Transmitter Output
6	RIN	RS-232-Compatible Receiver Input
7	V-	±5% External Power Supply. Decouple with a 0.1µF capacitor to ground.
8	GND	Ground

Detailed Description

RS-232-Compatible Drivers

The transmitter is an inverting level translator that converts CMOS-logic levels to EIA/TIA-232-compatible levels. It guarantees data rates up to 460kbps with worst-case loads of 3kΩ in parallel with 1000pF. When $\overline{SHDN}$ is driven low, the transmitter is disabled and put into 3-state mode. The transmitter input does not have a pull-up resistor. Connect to ground if unused.

RS-232-Compatible Receivers

The MAX3314's receiver converts RS-232 signals to CMOS-logic output levels. The receiver is rated to signals up to ±25V. The MAX3314's receiver will remain active during shutdown mode.

MAX3314 Shutdown Mode

In shutdown mode, the transmitter output is put into high impedance. This reduces the supply current to 1µA. The time required to exit shutdown is less than 2.5µs. Table 1 is the shutdown logic truth table.

Table 1. Shutdown Logic Truth Table

$\overline{SHDN}$	TRANSMITTER OUTPUT	RECEIVER OUTPUT
L	High-Z	Active
H	Active	Active

Applications Information

Capacitor Selection

The capacitor type used is not critical for proper operation; either polarized or nonpolarized capacitors are acceptable. If polarized capacitors are used, connect polarity as shown in the *Typical Operating Circuit.*

Bypass V_{CC} and V- to ground with at least 0.1µF.

Transmitter Output When Exiting Shutdown

Figure 1 shows the transmitter output when exiting shutdown mode. The transmitter is loaded with 3kΩ in parallel with 1000pF. The transmitter output displays no ringing or undesirable transients as the MAX3314 comes out of shutdown. Note that the transmitter is enabled only when the magnitude of V- exceeds approximately -3V.

High Data Rates

The MAX3314 maintains minimum RS-232-compatible ±3.7V transmitter output voltage even at high data rates.

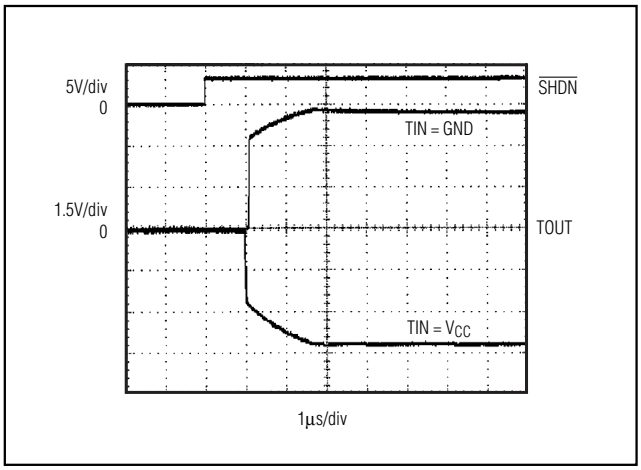

Figure 1. Transmitter Output When Exiting Shutdown or Powering Up

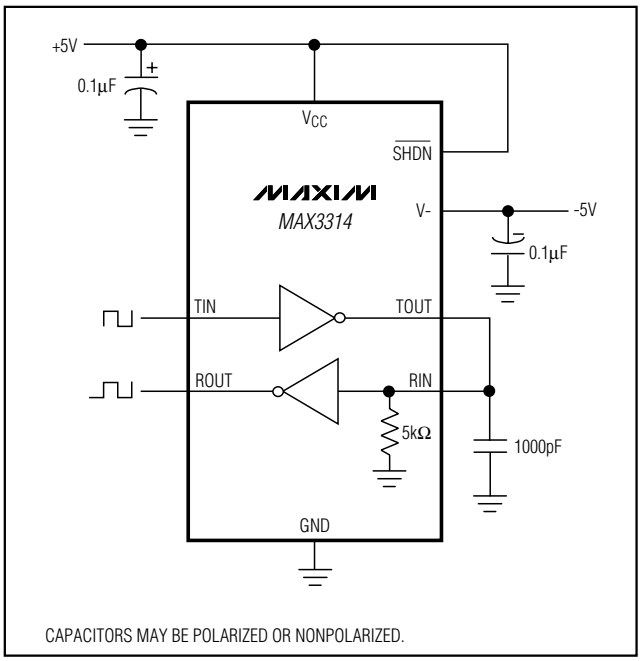

Figure 2. Loopback Test Circuit

Figure 2 shows a transmitter loopback test circuit. Figure 3 shows the loopback test result at 120kbps, and Figure 4 shows the same test at 250kbps.

Chip Information

TRANSISTOR COUNT: 128

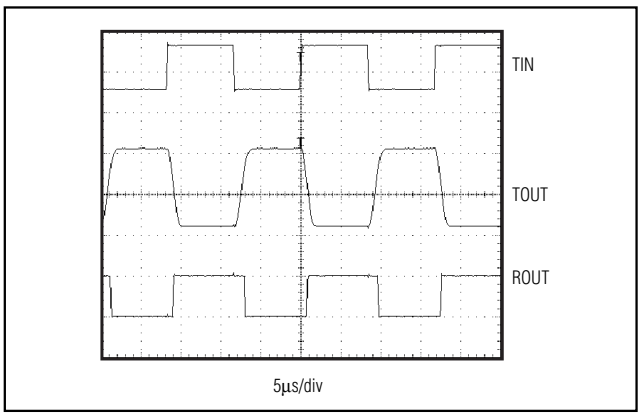

Figure 3. Loopback Test Results at 120kbps

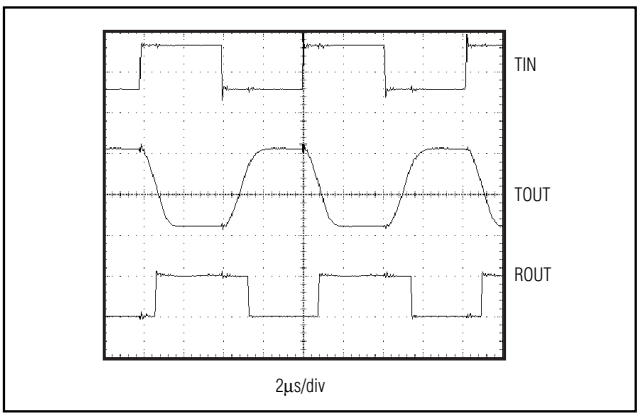

Figure 4. Loopback Test Results at 250kbps

Package Information

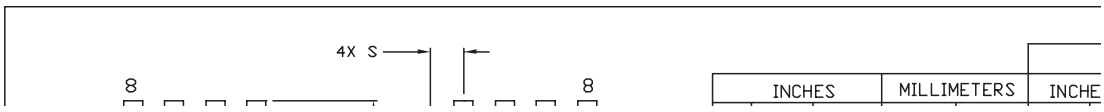

460kbps, 1µA, RS-232-Compatible Transceiver

Package Information (continued)

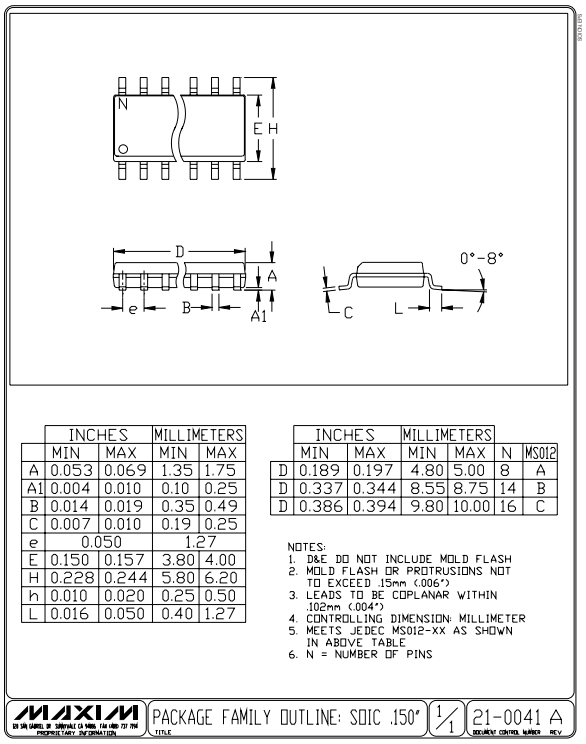

	INCHES		MILLIMETERS	
	MIN	MAX	MIN	MAX
A	0.053	0.069	1.35	1.75
A1	0.004	0.010	0.10	0.25
B	0.014	0.019	0.35	0.49
C	0.007	0.010	0.19	0.25
e	0.050		1.27	
E	0.150	0.157	3.80	4.00
H	0.228	0.244	5.80	6.20
h	0.010	0.020	0.25	0.50
L	0.016	0.050	0.40	1.27

	INCHES		MILLIMETERS			
	MIN	MAX	MIN	MAX	N	MS012
D	0.189	0.197	4.80	5.00	8	A
D	0.337	0.344	8.55	8.75	14	B
D	0.386	0.394	9.80	10.00	16	C

NOTES:
1. D&E DO NOT INCLUDE MOLD FLASH
2. MOLD FLASH OR PROTRUSIONS NOT TO EXCEED .15mm (.006")
3. LEADS TO BE COPLANAR WITHIN .102mm (.004")
4. CONTROLLING DIMENSION: MILLIMETER
5. MEETS JEDEC MS012-XX AS SHOWN IN ABOVE TABLE
6. N = NUMBER OF PINS

MAXIM | PACKAGE FAMILY OUTLINE: SOIC .150" | 1/1 | 21-0041 A

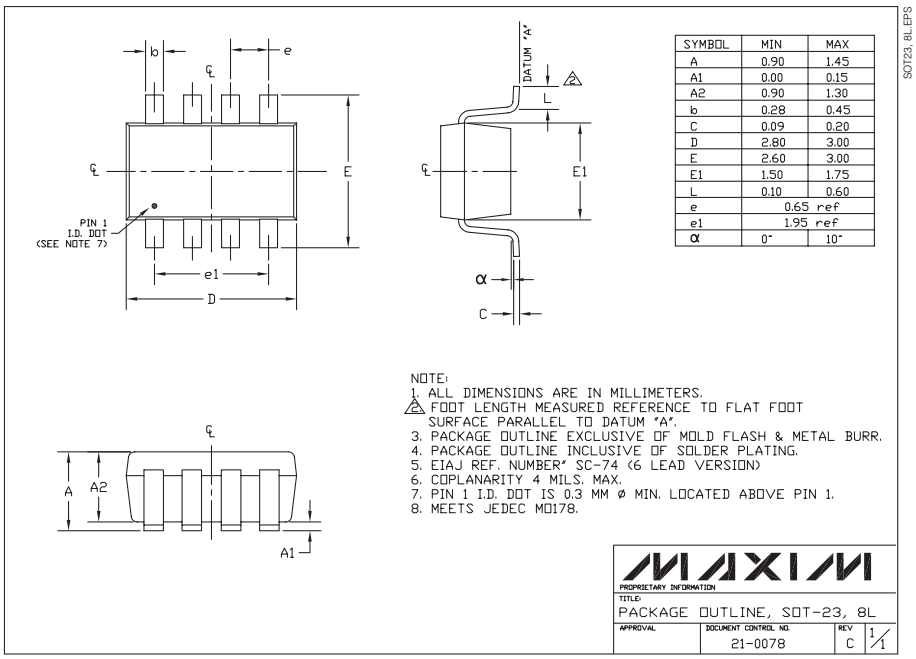

SYMBOL	MIN	MAX
A	0.90	1.45
A1	0.00	0.15
A2	0.90	1.30
b	0.28	0.45
C	0.09	0.20
D	2.80	3.00
E	2.60	3.00
E1	1.50	1.75
L	0.10	0.60
e	0.65 ref	
e1	1.95 ref	
α	0°	10°

SOT23, 8L.EPS

NOTE:
1. ALL DIMENSIONS ARE IN MILLIMETERS.
2. FOOT LENGTH MEASURED REFERENCE TO FLAT FOOT SURFACE PARALLEL TO DATUM "A".
3. PACKAGE OUTLINE EXCLUSIVE OF MOLD FLASH & METAL BURR.
4. PACKAGE OUTLINE INCLUSIVE OF SOLDER PLATING.
5. EIAJ REF. NUMBER" SC-74 (6 LEAD VERSION)
6. COPLANARITY 4 MILS. MAX.
7. PIN 1 I.D. DOT IS 0.3 MM ø MIN. LOCATED ABOVE PIN 1.
8. MEETS JEDEC MO178.

MAXIM PROPRIETARY INFORMATION
TITLE: PACKAGE OUTLINE, SOT-23, 8L
APPROVAL | DOCUMENT CONTROL NO. 21-0078 | REV C | 1/1

Maxim cannot assume responsibility for use of any circuitry other than circuitry entirely embodied in a Maxim product. No circuit patent licenses are implied. Maxim reserves the right to change the circuitry and specifications without notice at any time.

© 2001 Maxim Integrated Products Printed USA MAXIM is a registered trademark of Maxim Integrated Products.